3 Relay 240 to 24VAC Interface Module

Smartpak 3

P/N SP3

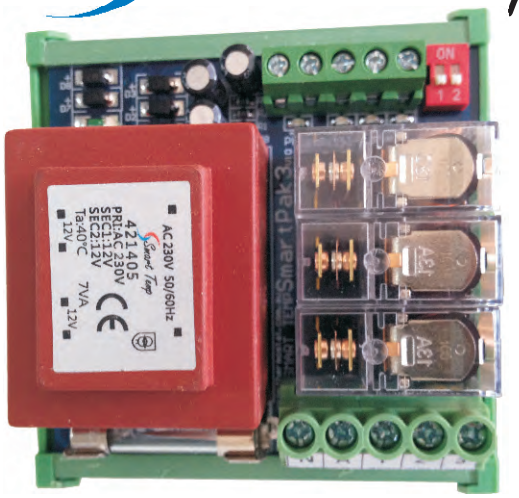

The Smartpak 3 interface module is a simple and reliable device that has been built to permit a 24V thermostat or other low voltage devices to switch equipment with 240V control circuitry.

Features

Power LED
A green power LED will inform you that the fuse is ok and that 24VAC is available to power the thermostat. 24V AC power is available on the R & C terminals.

Relay LEDS
Each 24V relay has a LED to indicate the input is active and the relay is energised. 240V will be available on the output.

Logic Switches
2 DIP switches are provided to interlock relays. These switches permit the Smartpak to control a heat pump system with a heat cool type thermostat if necessary by automatically bringing on the compressor (and the fan if required) with a heat call for example.

Dip Switch 1	Input 3 Activate Relay 2 & 3
Dip Switch 2	Input 3 Activates Relay 1 & 3
Dip Switch 1 & 2	Input 3 Activates Relay 1, 2 & 3

NOTE: Normally when using Smart Temp thermostat both of these switches should be OFF as this logic is built into the Smart Temp Thermostat.

Fuse
An easily replaceable 3AG 15 amp fuse is provided to protect the Smart Pak relays and the equipment connected to the Smart Pak. Before replacing this fuse investigate the cause for the fuse failure.

24V Power
The "R" terminal should be connected to the thermostat "R" or"24V+"terminal. If required by the thermostat the Smartpak "C" terminal should be connected to the thermostat "C" or "24V-" terminal. The Smartpak will supply 200mA to power a thermostat - it is not designed to directly drive valves, actuators or other high current devices.

Relays
Quality Omron 10A relays are used in the Smartpak, additionally the 240V active input is hardwired to the relay common of the 3 relays. No external link is required

DIN Rail Base.
A multi DIN connector is built into the Smartpak base to facilitate the easy installation of the Smartpak. A small length of DIN rail is also supplied with each Smartpak.

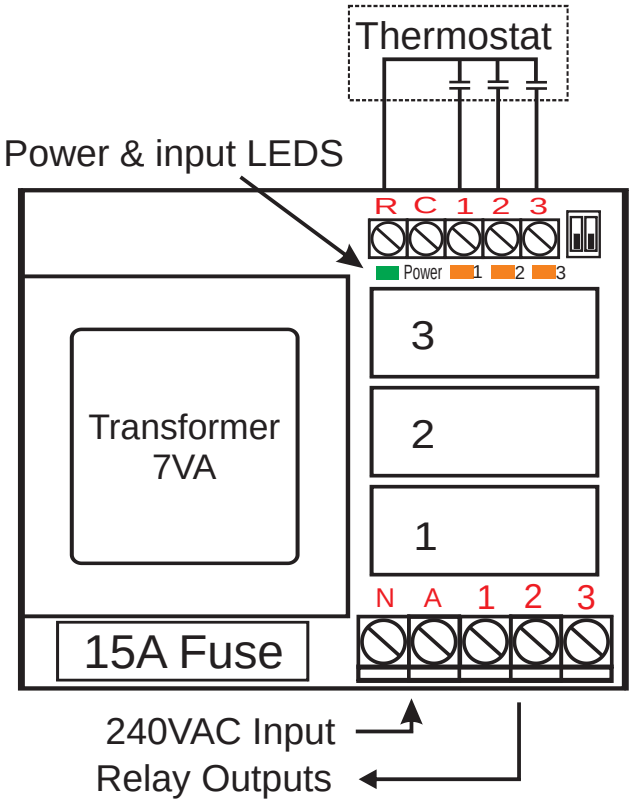

Smart Temp Australia P/L
U20/1488 Ferntree Gully Road Knoxfield Vic 3180
Phone (03) 9763 0094 Fax (03) 9763 0098
www.thermostat.com.au www.smarttemp.com.au

Specifications

Part Number	SP3
Mounting	DIN
Size	82mm x 86mm x 58mm
Weight	0.35kg
Relays	3 x 10A
Fuse	3AG 15A Max
Transformer	240V Primary 7VA
Output	24VAC @200mA
IP	20
Warranty	1 Year RTB

Wiring Examples

Typical HP / HC wiring

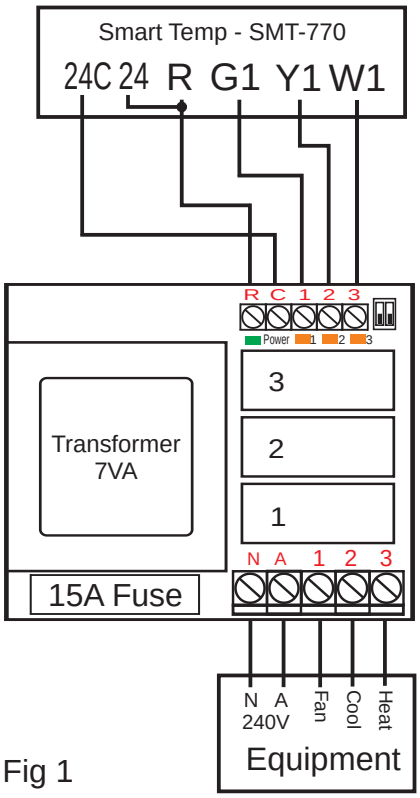

Fig 1

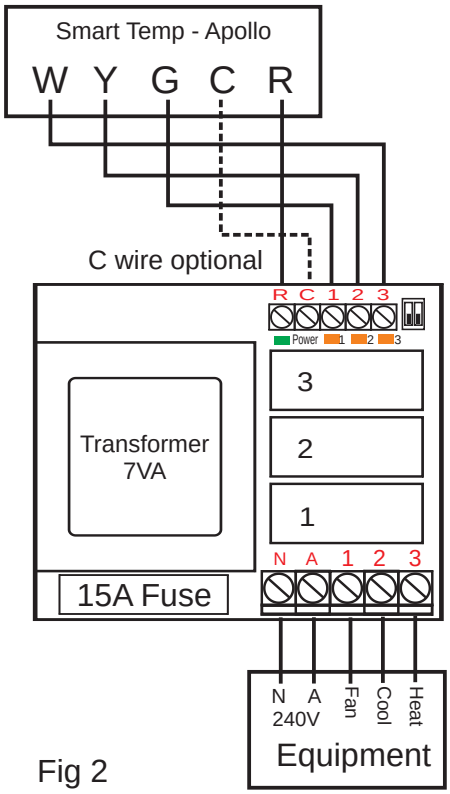

Fig 2

3 speed fan coil

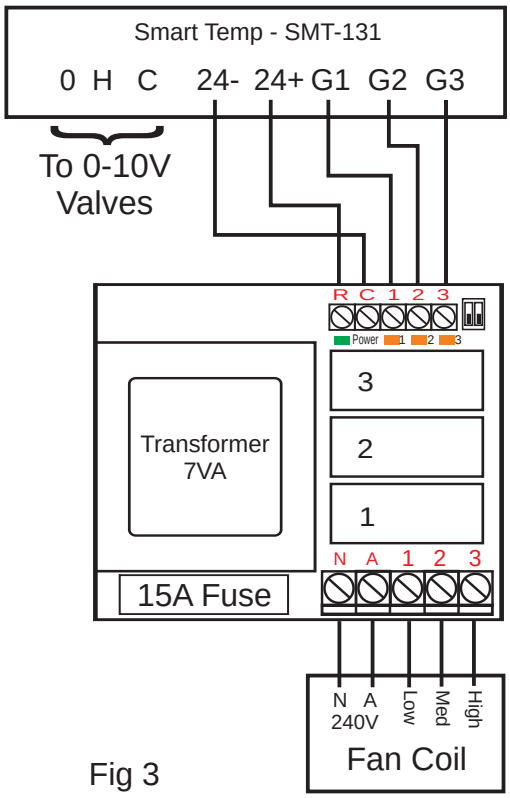

Fig 3

Heat pump system with heat cool thermostat

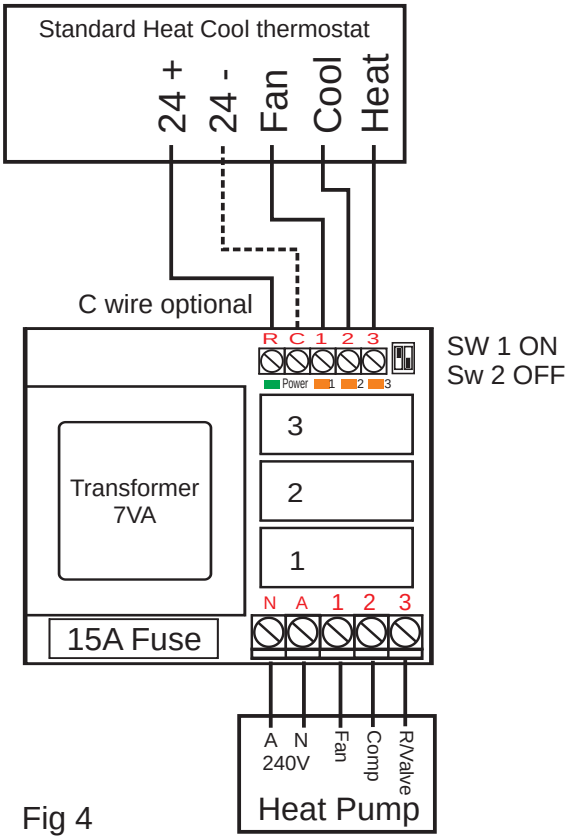

Fig 4